THIS DRAWING IS UNPUBLISHED. RELEASED FOR PUBLICATION – ,– .
© COPYRIGHT – By – ALL RIGHTS RESERVED.

LOC	DIST
AJ	00

REVISIONS

P	LTR	DESCRIPTION	DATE	DWN	APVD
	B3	ECR–18–010179	29JUN2018	RZ	RS

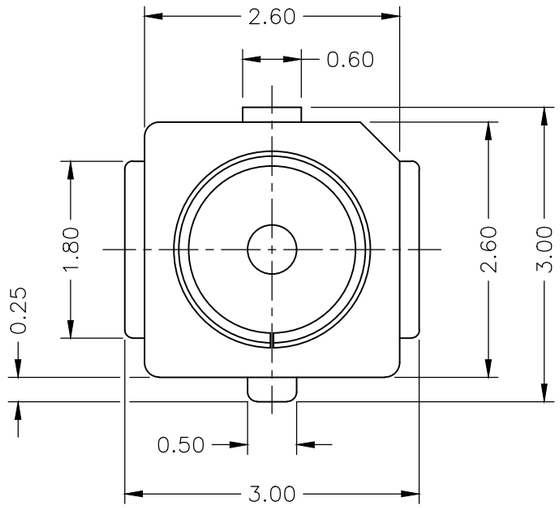

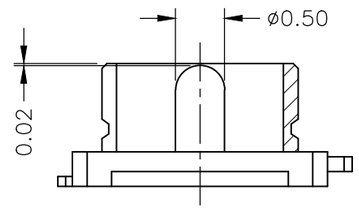

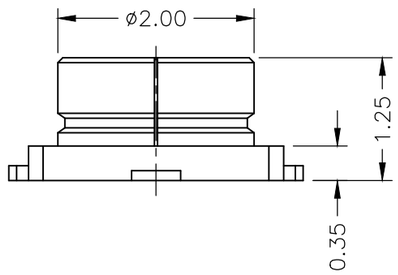

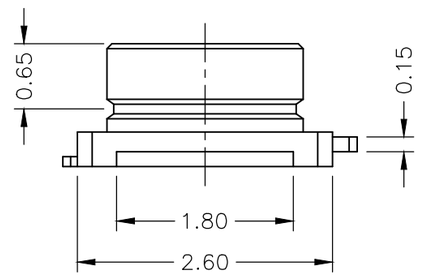

NOTES

1 PACKAGING: 5K/REEL x 6 = 30K PER BOX.

2 MATERIAL & FINNISH:

2.1 CONTACT MATERIAL: COPPER ALLOY.

2.2 INSULATOR: HIGH TEMPERATURE PLASTIC UL94V–0..

2.3 CONTACT FINISH: GOLD 5U" ON MATING AREA,GOLD FLASH ON SOLDER TAILS, ALL OVER 50U" NICKEL(MIN.) UNDER PLATED.

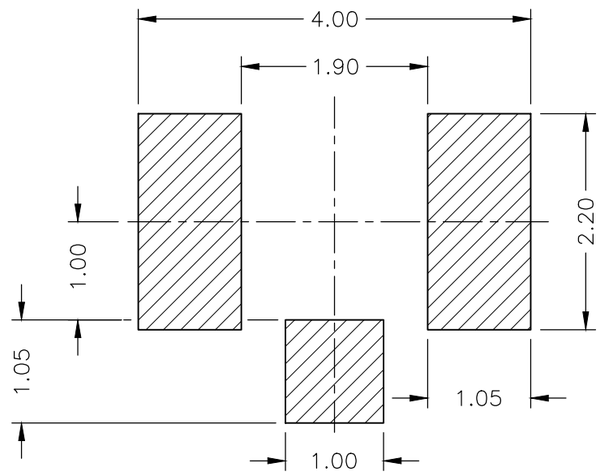

RECOMMENDED PCB LAYOUT

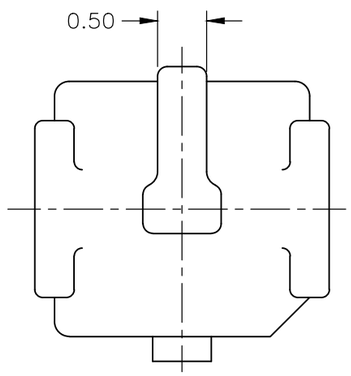

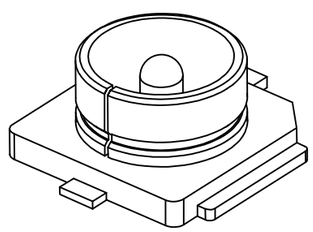

1909763–1
PART NUMBER

Q'TY	U/M	DESCRIPTION	ITEM NO.
1	EA	GROUND PAD: METAL SHELL, GOLD PLATING	3
1	EA	CENTER PIN: CENTER CNT, GOLD PLATING	2
1	MM	HOUSING: OVER MOLD HOUSING, LCP,IVORY,UL94V–0	1

THIS DRAWING IS A CONTROLLED DOCUMENT.

DIMENSIONS: mm [INCHES]

TOLERANCES UNLESS OTHERWISE SPECIFIED:

0 PLC	± 0.5
1 PLC	± 0.35
2 PLC	± 0.25
3 PLC	± 0.05
4 PLC	± –
ANGLES	± 3°

MATERIAL: SEE NOTE

FINISH: SEE NOTE

DWN GARY GAO 16Aug2010
CHK RITA ZUO 16Aug2010
APVD JONGSENG GOH 16Aug2010
PRODUCT SPEC 108–112005
APPLICATION SPEC —
WEIGHT —

TE Connectivity

NAME: MINI. RF HEADER

SIZE	CAGE CODE	DRAWING NO	RESTRICTED TO
A3	00779	C–1909763	—

CUSTOMER DRAWING

SCALE	SHEET	REV
16:1	1 OF 2	B3

1470–19 (3/11)

Downloaded from Arrow.com.

THIS DRAWING IS UNPUBLISHED. RELEASED FOR PUBLICATION – ,– .
© COPYRIGHT – By – ALL RIGHTS RESERVED.

LOC	DIST
AJ	00

REVISIONS

P	LTR	DESCRIPTION	DATE	DWN	APVD
	–	SEE SHEET 1	–	–	–

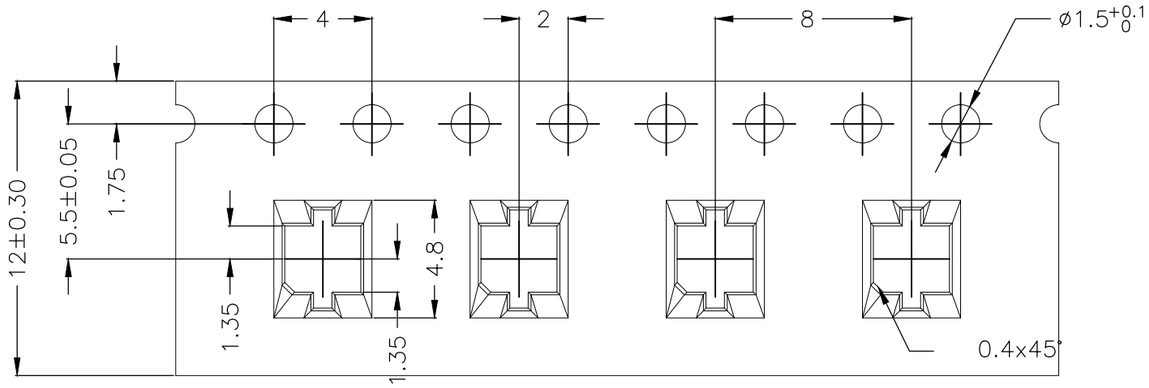

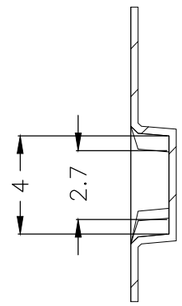

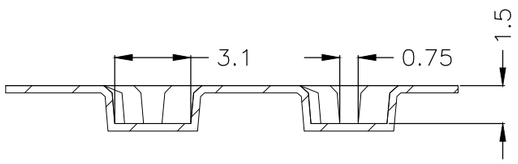

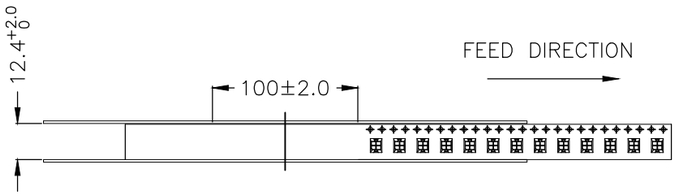

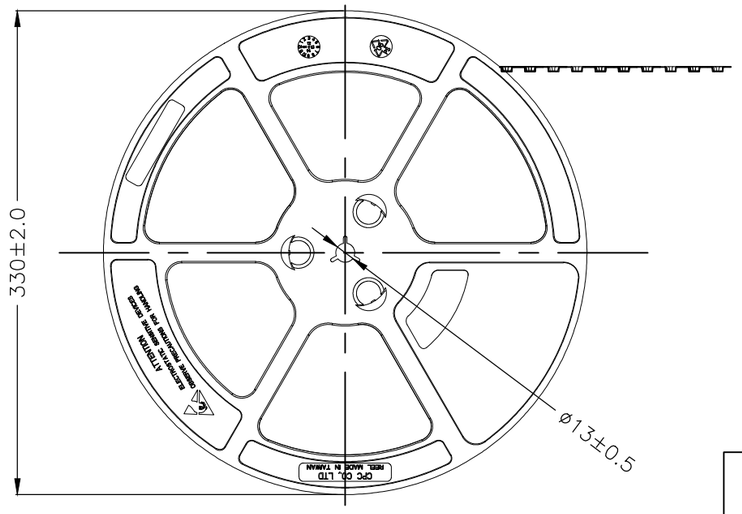

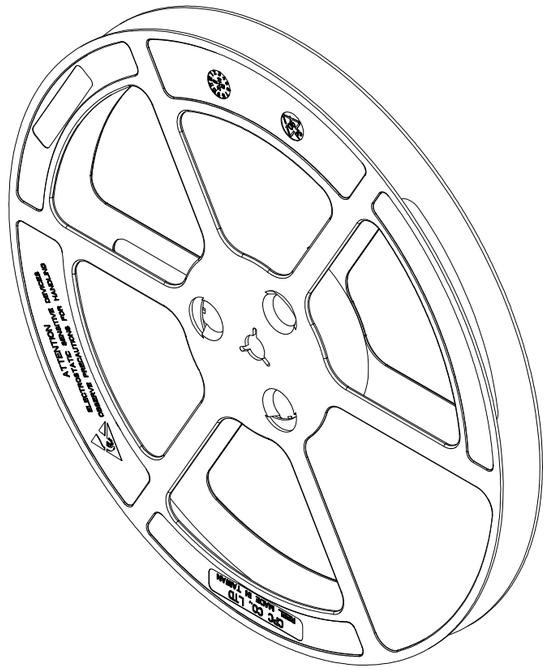

THIS DRAWING IS A CONTROLLED DOCUMENT.

DIMENSIONS: mm [INCHES]

TOLERANCES UNLESS OTHERWISE SPECIFIED:

0 PLC	± 0.15
1 PLC	± 0.10
2 PLC	± 0.10
3 PLC	± –
4 PLC	± –
ANGLES	± 3°

MATERIAL: SEE NOTE

FINISH: SEE NOTE

DWN	GARY GAO	16Aug2010
CHK	RITA ZUO	16Aug2010
APVD	JONGSENG GOH	16Aug2010

PRODUCT SPEC: 108–112005

APPLICATION SPEC: –

WEIGHT: –

TE Connectivity

NAME: MINI. RF HEADER

SIZE	CAGE CODE	DRAWING NO	RESTRICTED TO
A3	00779	C-1909763	–

CUSTOMER DRAWING

SCALE	SHEET	REV
NTS	2 OF 2	B3

Downloaded from Arrow.com.